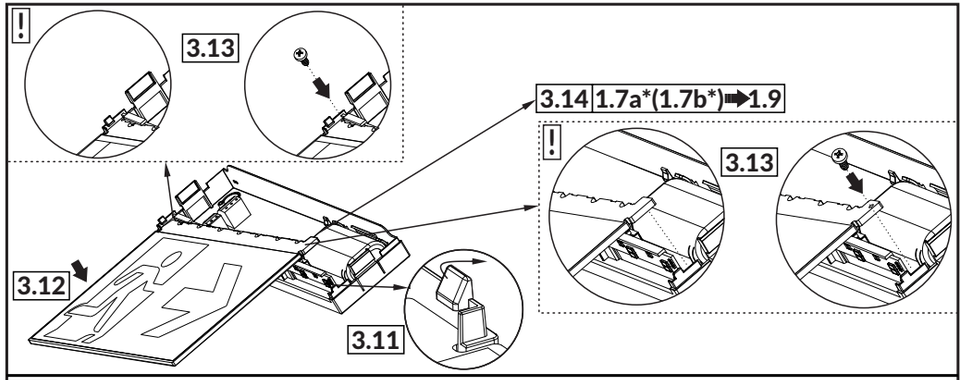

4 *ST / AT / DATA / DATA 2 / DALI **4.1 1.2➡1.3➡3.2a*(3.2b*)**

LiFePO4/C

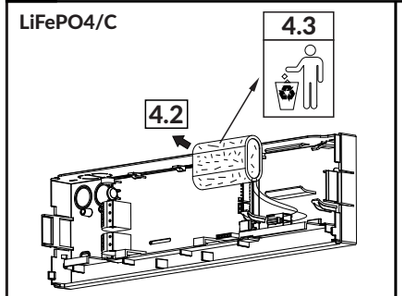

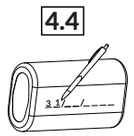

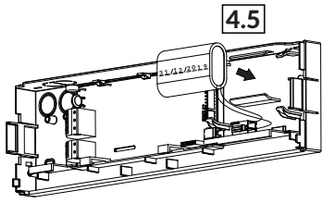

Ni-Cd HT 3.6V/0.8Ah

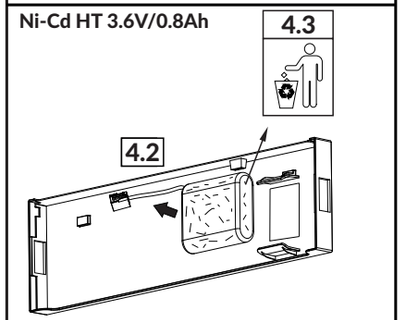

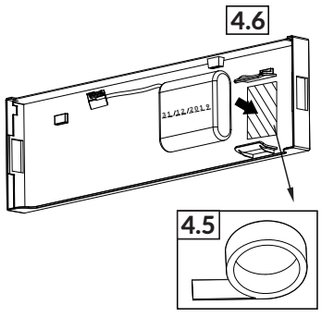

4.7 1.7a*(1.7b*)➡1.9

ONTEC G	E1B / E1E / E1P
t_c	95°C

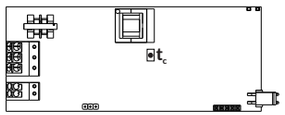

ONTEC G	E1A / E1U
t_c	80°C

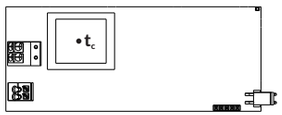

ONTEC G	CBA
t_c	95°C

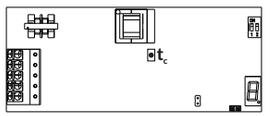

! CBA = CB2

TM TECHNOLOGIE Sp. z o.o., Morawica 355, 32-084 Morawica, gm. Liszki, Poland, tel.: +48 12 444 60 60, fax: +48 12 350 57 34, www.tmtechnologie.pl

TM TECHNOLOGIE
emergency & evacuation lighting

TM.ONTEC G

IP 20 | LED | 3h | 850 °C | 210 ÷ 250 V AC 50 / 60 Hz 186 ÷ 254 V DC

+10 ÷ +35°C | COLD | +15 ÷ +35°C | CE

A, B

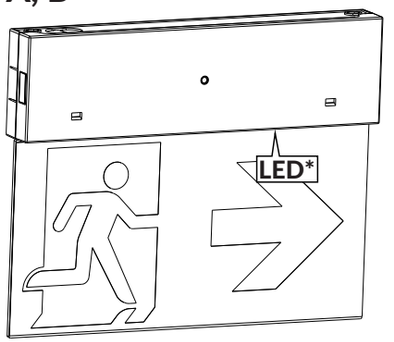

C

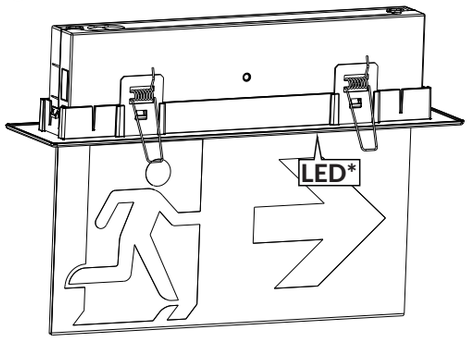

! ±1 [mm]

! **°C

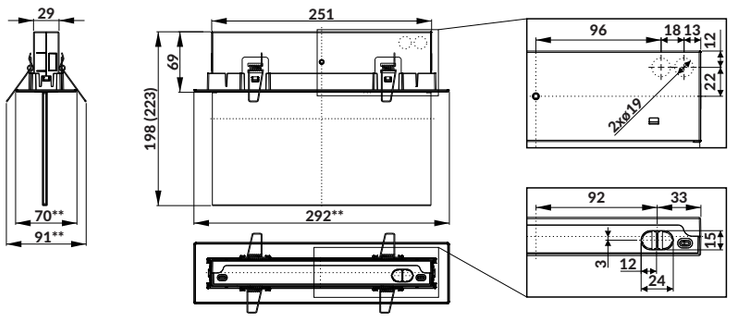

1 CBA / DATA 2

1.1

! CBA = CB2

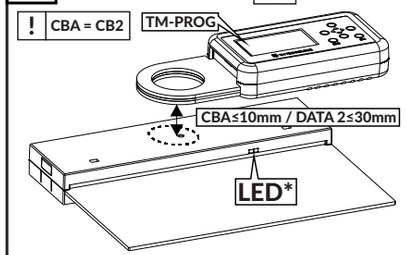

1.3

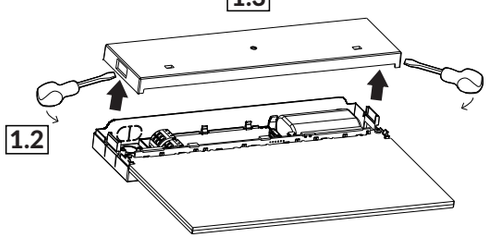

a

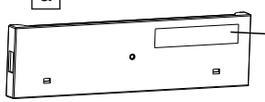

b

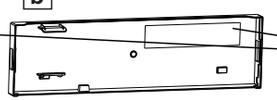

1A.4	ONTEC G
1B.4	N ☑ P ☐
	ONTEC G
1C.4	N ☐ P ☑

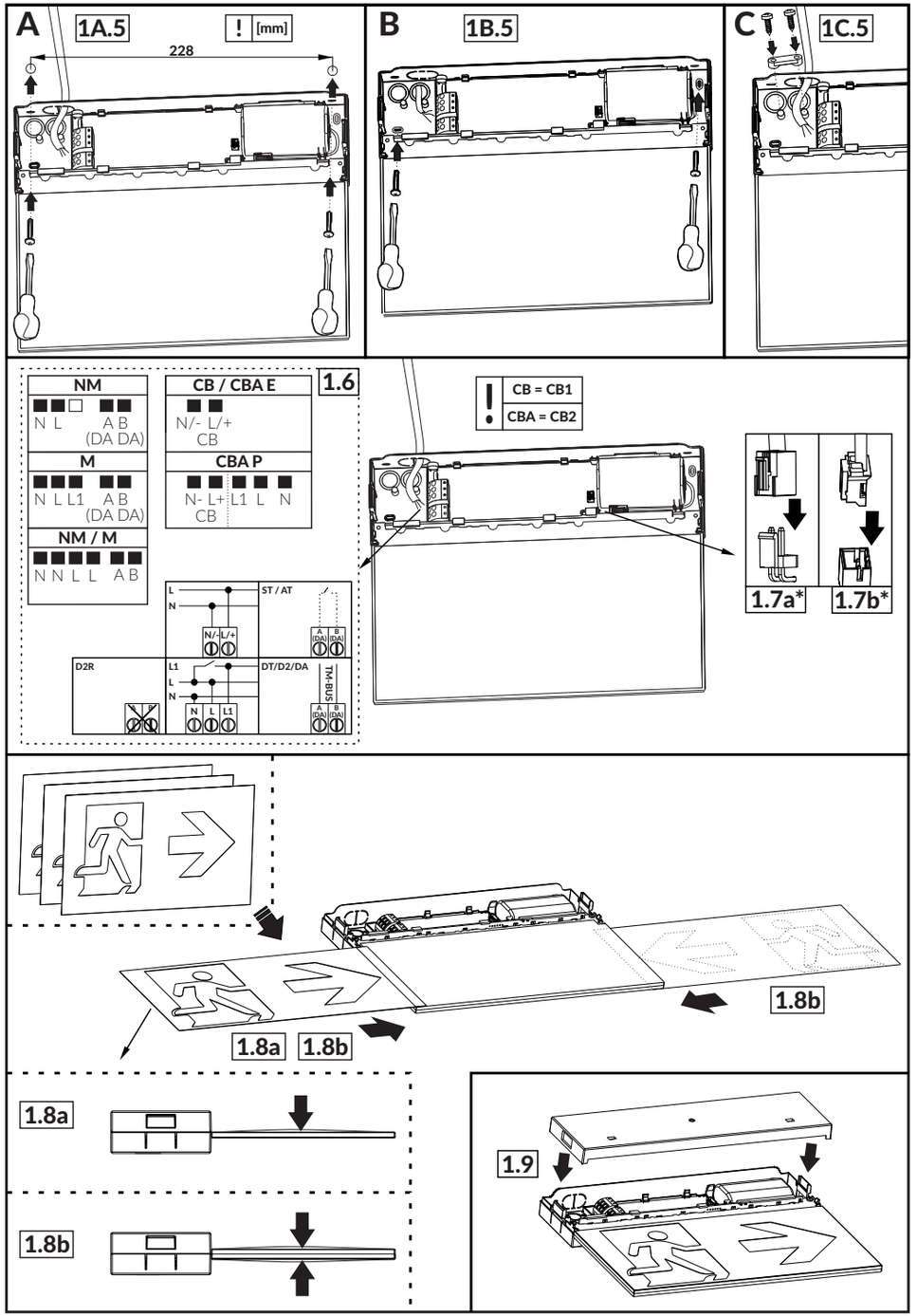
A
1A.5
! [mm]
228
B
1B.5
C
1C.5
NM
N L A B
(DA DA)
M
N L L1 A B
(DA DA)
NM / M
N N L L A B
CB / CBA E
N/- L/+
CB
CBA P
N- L+ L1 L N
CB
1.6
! CB = CB1
CBA = CB2
1.7a*
1.7b*
ST / AT
D2R
DT/D2/DA
TM-BUS
1.8a
1.8b
1.9

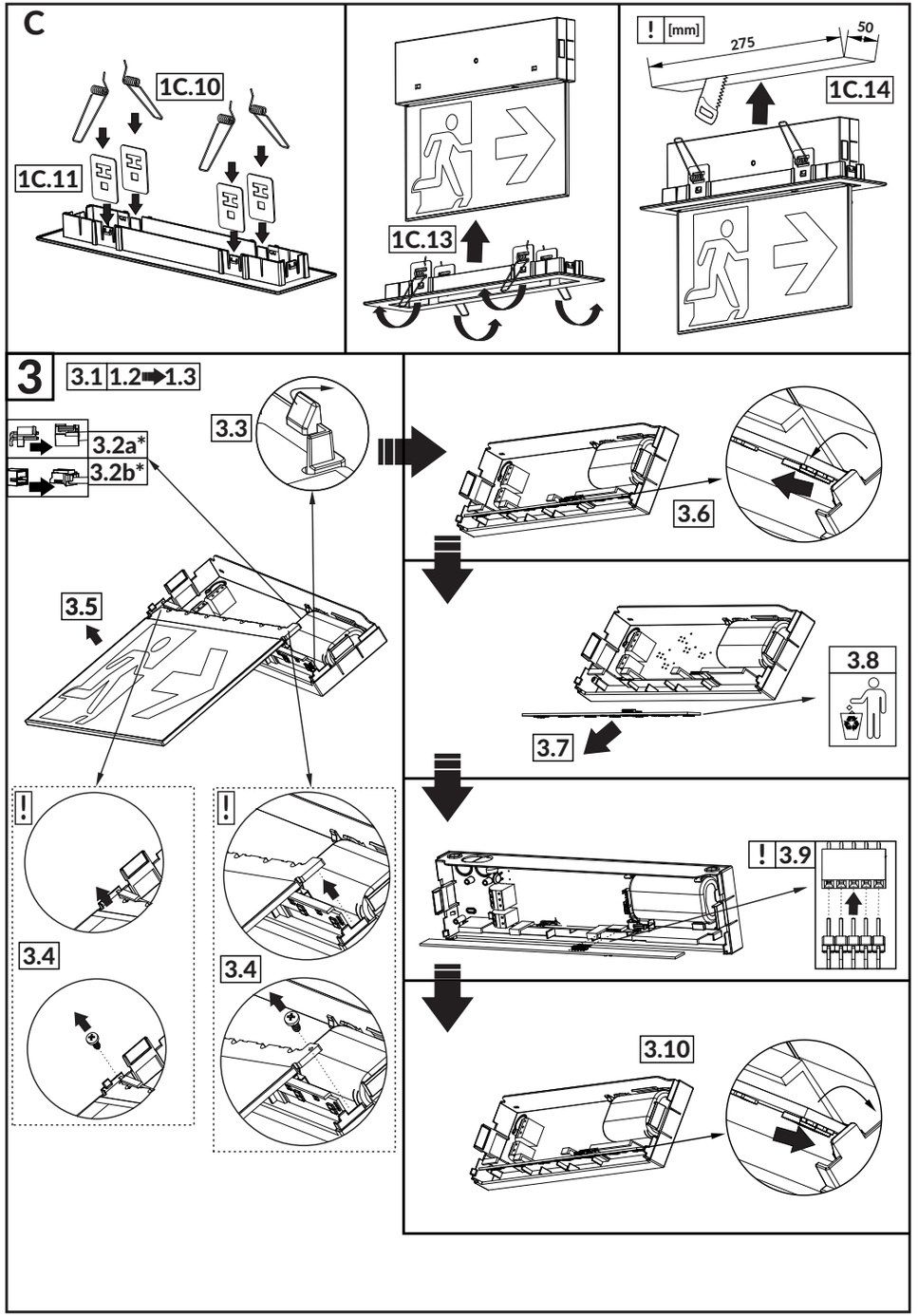
C
1C.10
1C.11
1C.13
! [mm]
275
50
1C.14
3
3.1 1.2➡1.3
3.2a*
3.2b*
3.3
3.5
3.6
3.7
3.8
! 3.9
3.4
3.10